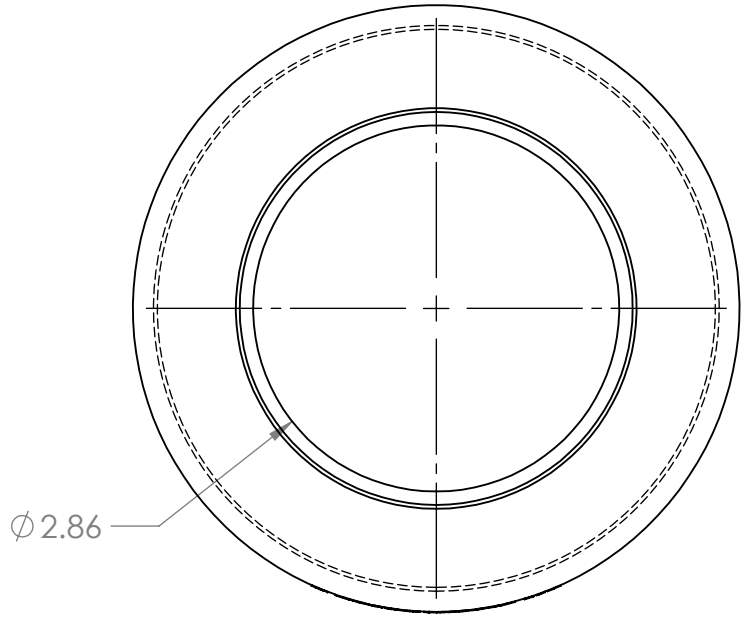

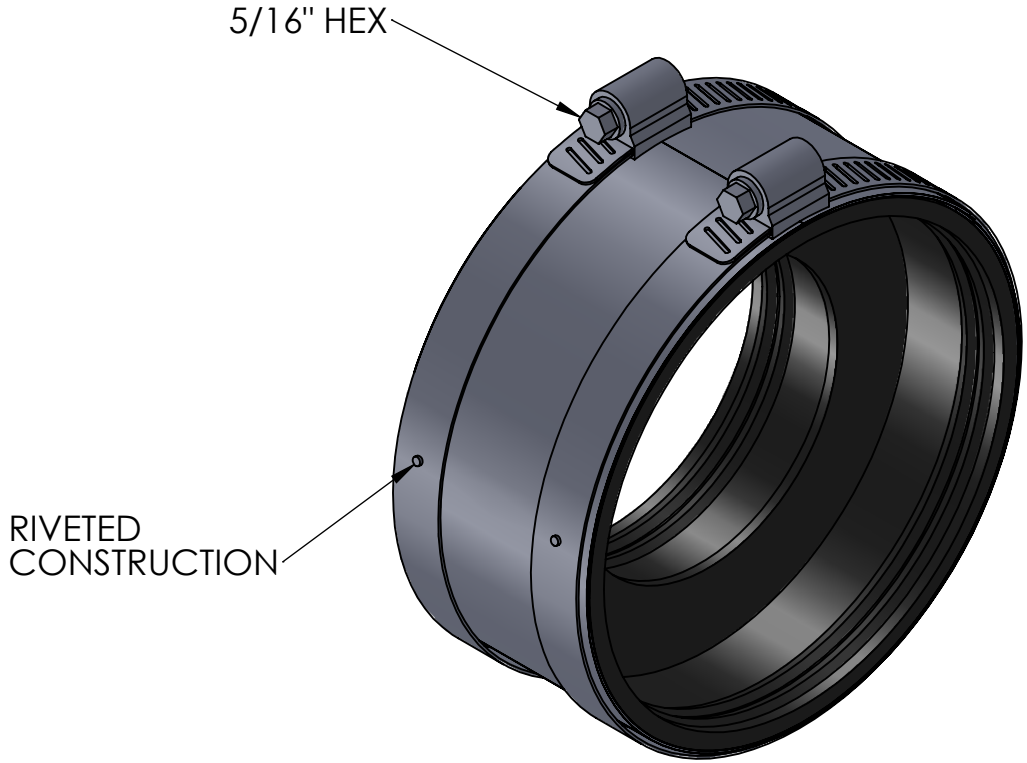

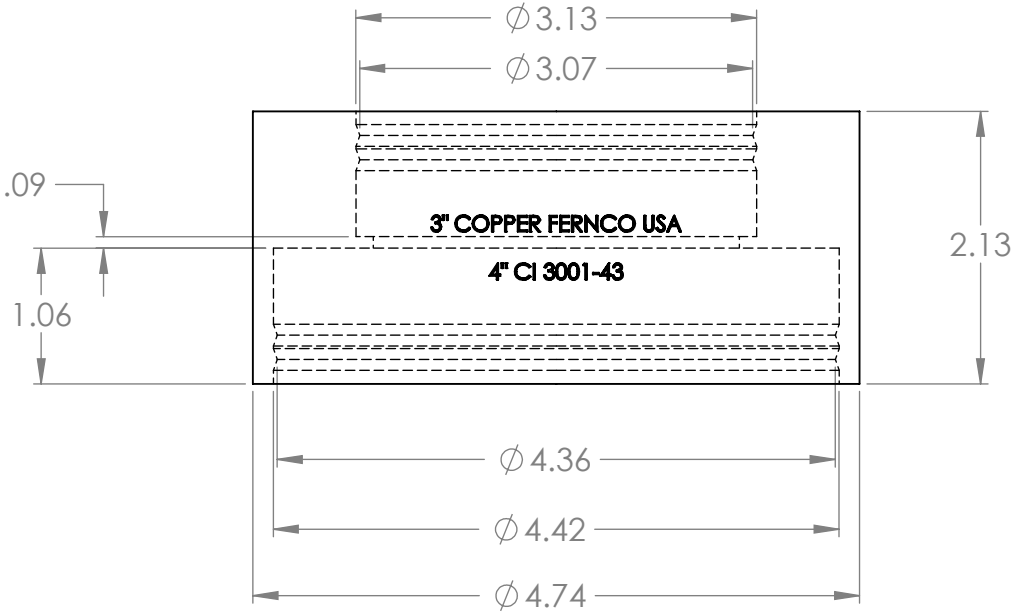

LEGEND:
CI = NO-HUB CAST IRON
PL = SCH. 40 PVC
ST = STEEL, IRON PIPE SIZE
XHCI = EXTRA HEAVY WEIGHT CAST IRON

Clamp/Shield: All 300 SS, Installation Torque 60 in-lb
Gasket Material: Rubber Complying to ASTM C564
Coupling: Complies to ASTM C 1460
Temperature Range: -30°F to 180°F
Drain, waste and Vent Use Only

Fernco Inc.

FERNCO INC. DAVISON MI.

Tolerance:
Angular ± 3°
.X = ± 0.09
.XX = ± 0.06

SHEET 1 OF 1

Dimensions are in Inches

Do Not Scale

Drawn by: SR

DATE: 3/26/2015

Part Number: **3001-43**

Description:
4" CI to 3" Copper